EFFECT OF SOLAR RADIATION ON TEMPERATURE OF BRIDGE RUBBER BEARING

Nagoya University, Student Member, ○ Paramashanti
Nagoya University, Member, Yasuo Kitane
Nagoya University, Fellow Member, Yoshito Itoh

1. Introduction

Since heat oxidation is one of the major deterioration factors for rubber, temperature has a significant influence on the deterioration process of rubber. The equivalent shear stiffness of a bridge rubber bearing increases over the aging time, and the higher the temperatures, the faster it increases. Bridge bearings are thought to usually be in the shadow as they are installed between superstructure and substructure. It is, hence, assumed that rubber in bearings has the same temperature as its surrounding ambient temperature. For that reason, a yearly average ambient temperature is currently used to predict aging of rubber bearings. However, there are many bearings that are exposed to solar radiation that causes bearing temperature to increase. To evaluate the effect of solar radiation on the bearing temperature, temperature measurements were performed on a bearing installed in an elevated highway in Nagoya, Japan in summer and winter seasons.

2. Bearing Temperature Measurement

The bearing is a high damping rubber (HDR) bearing of 670 mm x 670 mm installed on a concrete pier. As shown in Fig. 1, the bearing surfaces of the south and west sides receive sunlight much more than the north and east sides. The bearing has six rubber layers with a thickness of 26 mm, five layers of inner steel plates with a thickness of 4.5 mm, and two 36 mm thick steel end plates. The bearing has surface natural rubber (NR) with a thickness of 10 mm. Steel blocks to control bearing displacement in the transverse direction of the bridge are installed in front of the south and north surfaces, which are referred to as steel joint protections.

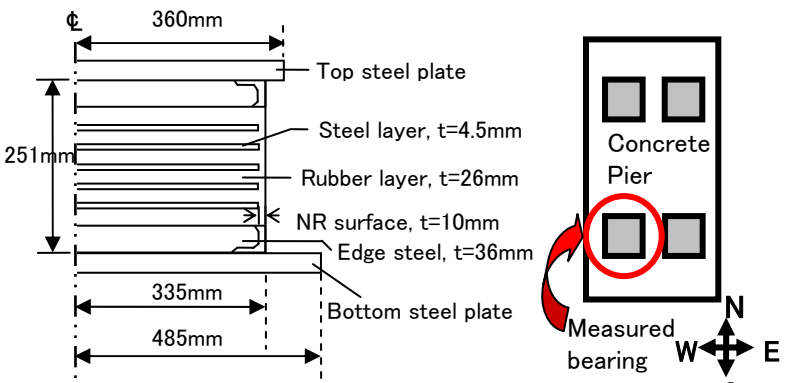

Fig. 1 Bearing size and experiment location

The measurement in the summer season was taken from August 25 to September 2, 2007, while in winter it was from January 18 to January 25, 2008. Bearing temperatures were measured, by using T-type thermocouples with a wire diameter of 0.32 mm, at nine points on the west and east sides, and eight points on the north and south sides. Temperatures of steel girder, bottom and top steel plates, a steel joint protection, and the top surface of concrete pier were also measured on each side of the bearing. The measurement positions are shown in Fig. 2. In addition, solar radiations were measured on the south and north sides using pyranometers with sensitivity of 7 mV/kW/m^2 for wave length of 305-2800 nm. Ambient temperature was also measured by thermocouple. Fig. 3 compares ambient and bearing surface temperatures in summer. The measured solar radiations for the first five days in summer are shown in Fig. 4.

During the experiment in summer, the maximum, minimum, and average ambient temperature were 35˚C, 23˚C, and 28˚C, respectively, while in winter, they are 10˚C, 0˚C, and 5˚C. It is found that bearing surface temperatures are always greater than the ambient temperature in both summer and winter. By examining Figs. 3 and 4, it is clear that bearing surface temperature is influenced by solar radiation. The east surface receives solar radiation in the morning, the south side does during the day, and the east side does in the last afternoon. When surface receives much solar radiation in a sunny day, surface temperature reaches the highest value of each surface in the day, and the difference between the surface temperature and the ambient temperature becomes

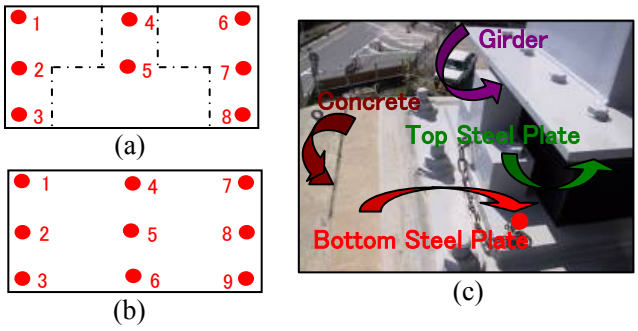

Fig. 2 Measurement locations: (a) south and north bearing surfaces, (b) west and east bearing surfaces, and (c) other measurement locations

Keywords: rubber bearing, base isolation, temperature, solar radiation
Contact Address: Department of Civil Engineering, Nagoya University, Furo-cho, Chikusa-ku, Nagoya 464-8603

significantly large. In summer, the maximum bearing temperature was 55˚C, which was 20˚C higher than the ambient temperature at the same time. A greater difference was found in winter as the maximum bearing surface temperature was 46˚C, which was 36˚C higher than the ambient temperature. The maximum bearing temperature occurred on the west side in summer and on the south side in winter. However, differences between average ambient temperatures and average bearing surface temperatures over the measurement period are only 1.9˚C on the east side, 2.4˚C on the west side, 2.5˚C on the south side, and 1.3˚C on the north side. In winter, the differences between the average values seem to be slightly greater, but of the same order. The average surface temperature and average ambient temperature did not differ much, implying that the bearing surface does not keep the heat energy, but loses the heat soon after it receives. It should also be noted that the surface temperature of the north side that is in the shadow tends to be very close to the ambient temperature even when other surfaces have very high temperatures due to solar radiation, which implies that solar radiation on one surface does not affect temperature of other surfaces significantly.

Temperatures of the surrounding areas were measured to understand boundary conditions of the bearing. Results show similar variations to those of bearing surface temperatures – temperatures differ significantly from the ambient temperature only when they are exposed to solar radiation. The difference between average temperature of each measured location and average ambient temperature ranged from 1˚C to 3˚C for the east, south, and west sides in summer, while the difference ranged from 1˚C to 2˚C for those sides in winter. On the north side, temperatures of surrounding areas are similar to the ambient temperature.

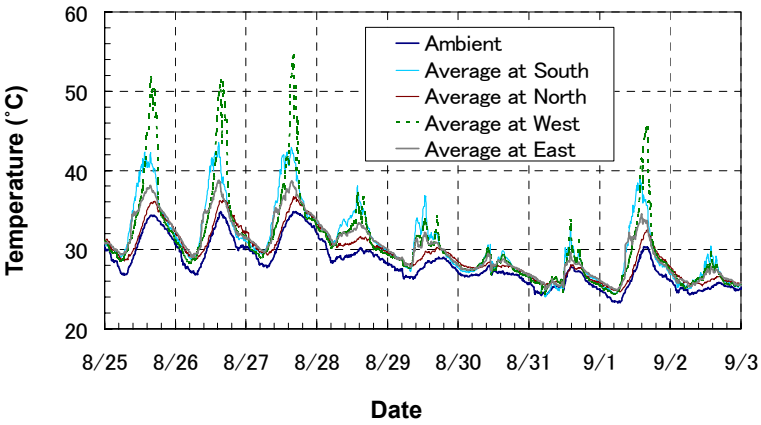

Fig. 3 Comparison between ambient temperature and bearing surface temperature

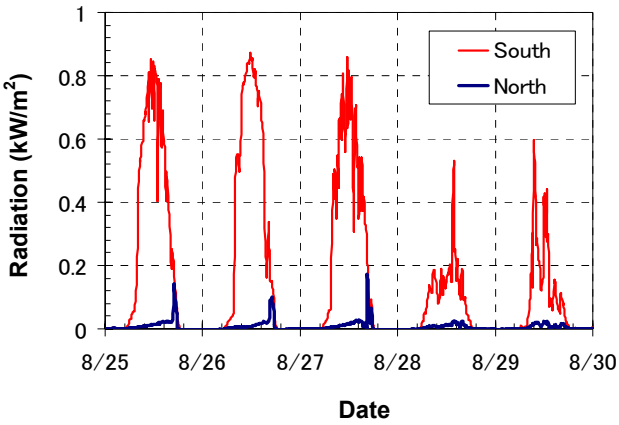

Fig. 4 Solar radiation

3. Conclusion

From the field measurements of bearing surface temperatures, it can be concluded that bearing surface temperatures are much higher than ambient temperature when the surface is exposed to solar radiation. However, when the bearing surface does not receive solar radiation because it is in the shadow or because it is cloudy or rainy, the difference becomes small. When average temperatures over the measurement period are compared, the difference between bearing surface and ambient temperatures is only 2˚C to 4˚C, even on the surfaces that receive solar radiation during the day.

The temperature data obtained in this study are only surface temperatures of the bearing. It is, however, necessary to understand temperature variations inside a bearing to accurately evaluate the long-term performance of bearing. For this purpose, heat transfer analysis using finite element techniques is planned to be performed to estimate a temperature variation inside the bearing. Boundary conditions of the finite element model that can consider heat exchange through conduction, convection, and radiation between the bearing and its surrounding will be developed based on the field measurements.

Reference

1) Itoh, Y., Gu, H.S., Satoh, K. and Kutsuna, Y.: Experimental investigation on aging behaviors of rubbers used for bridge bearings, *Journal of Structural Mechanics and Earthquake Engineering,* JSCE, No.808/I-74, pp.17-32, 2006.
2) Itoh, Y., Gu, H.S., Satoh, K. and Yamamoto, Y.: Long-term deterioration of high damping rubber bridge bearing, *Journal of Structural Mechanics and Earthquake Engineering,* JSCE, Vol.62, No.3, pp.595-607, 2006.
3) Itoh, Y., Satoh, K., Gu, H.S., and Yamamoto, Y.: Study on deterioration characteristics of natural rubber bearings, *Journal of Structural Mechanics and Earthquake Engineering,* JSCE, Vol.62, No.2, pp.255-266, 2006 (in Japanese).